8 Out Distribution Box

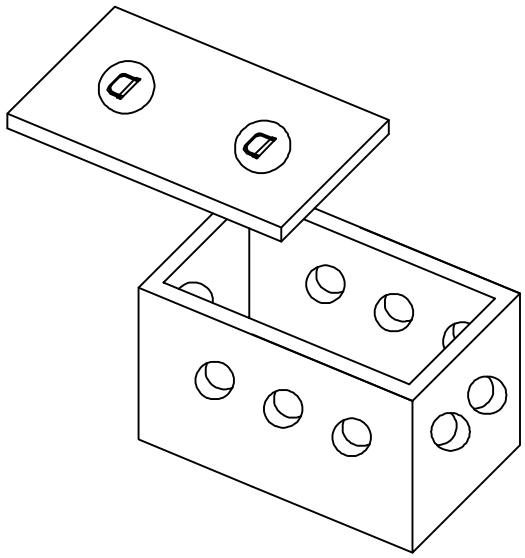

Isometric View

NOTES:

1. **CONCRETE MIN. STRENGHT - 5,000psI @ 28 DAYS**
2. **REINFORECMENT - FIBER or WIRE MESH**
3. **AIR ENTRAINMENT - 5%**
4. **PIPE INLET - POLYLOK BAFFLE-FILTER READY SEAL, # 3020**
5. **PIPE OUTLET - POLY 1 SEAL, # 3000**

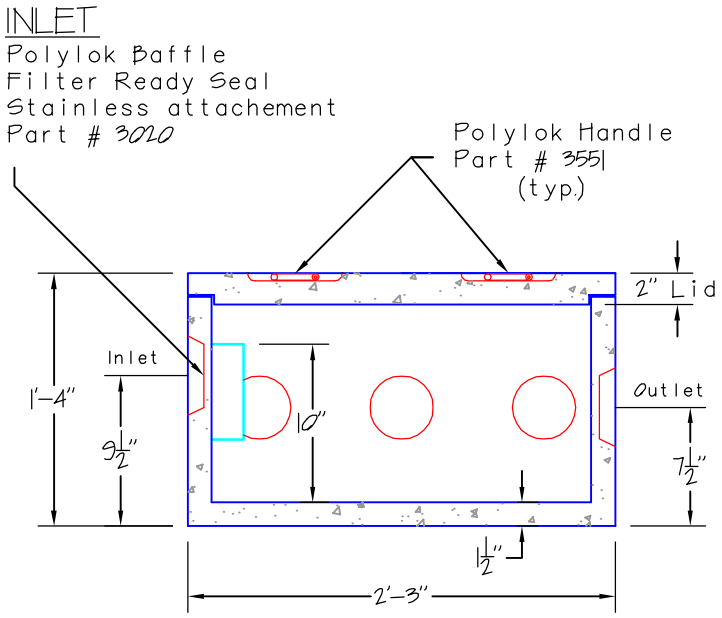

Side View

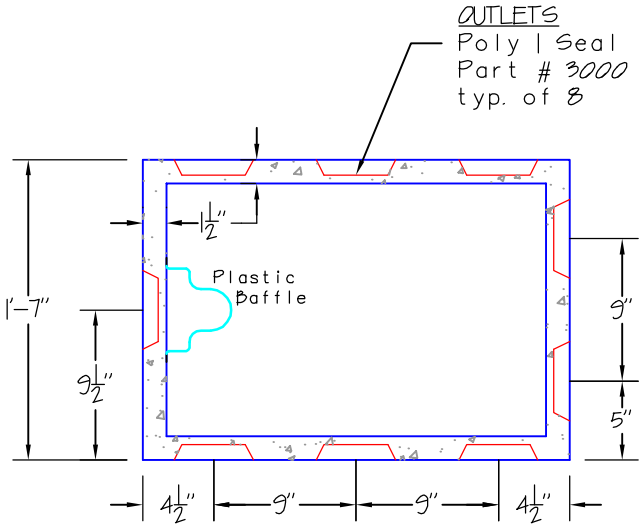

Plan View

Arnold Pre-Cast, Inc.

129 West Street
Malone, New York 12953

518-651-2500
518-651-2502 fax